PART NO. DCAJ430

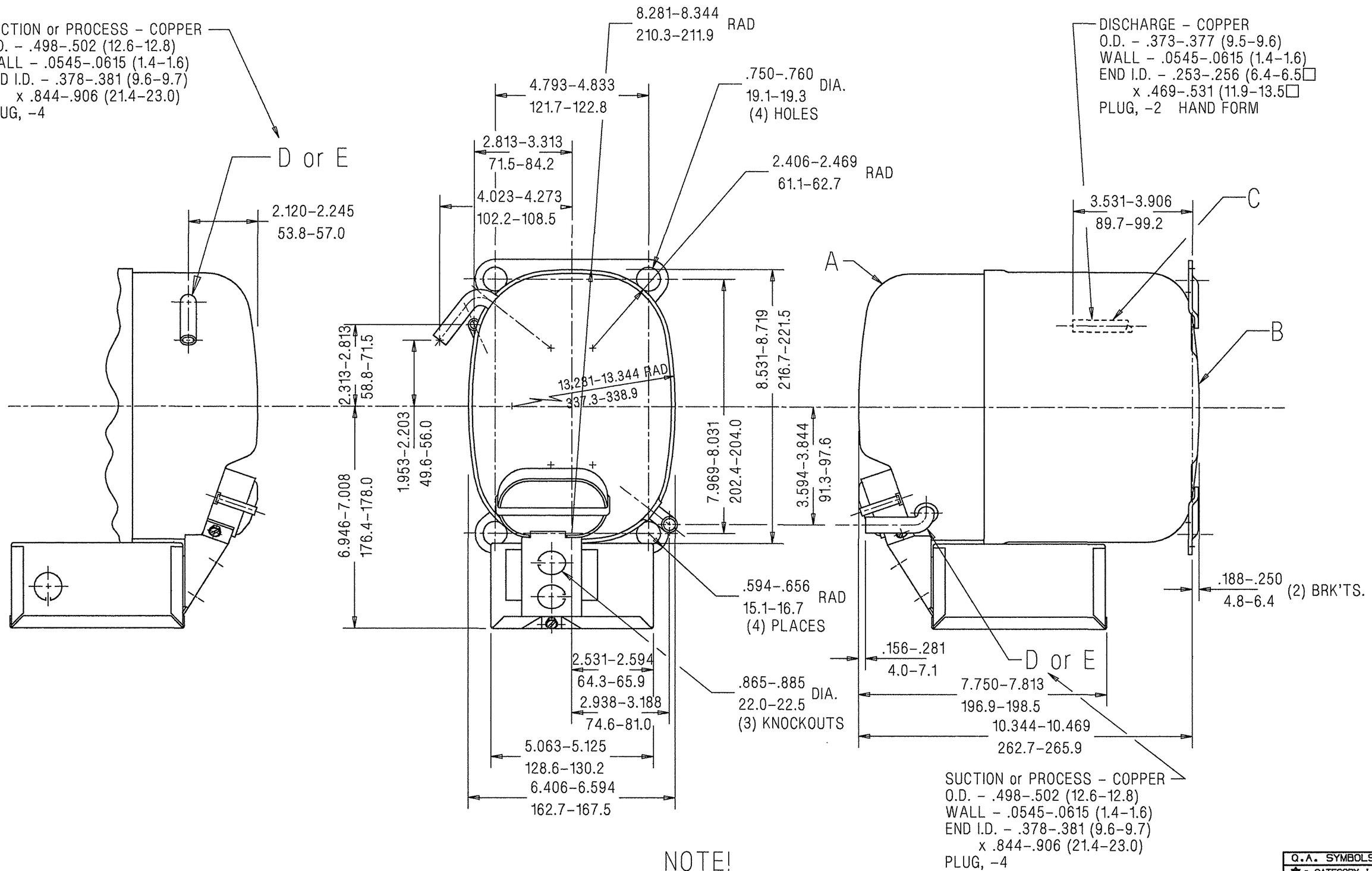

NOTE!

1. IF SPECIFIED ON BILL OF MATERIAL ASSEMBLE THESE PARTS AS SHOWN.
2. SEE SPEC. "A-B" & "A-C" FOR PROCESSING.

AJ

Q.A. SYMBOLS
✱ = CATEGORY I
▲ = CATEGORY II
■ = CATEGORY III
= CATEGORY IV

NOTE!

1. SEE DWG. #AHT1 FOR ASSEMBLY OF DISCHARGE CONNECTOR AND LOWER SHOCK LOOP IN LOWER HOUSING.

A	HA635-6		#228106-1 REMOVED HA-536-99 & HA-535	N.L.C. 8-14-95	
B	HA634				
C	34366		WAS EXDCAJ-1983 #221861	HB 5/31/90	
D	34372				
E	34372				
			A 6A		REL

LT LC — CHANGE — DATE

THIS DRAWING OR PRINT IS THE PROPERTY OF TECUMSEH PRODUCTS COMPANY (TECUMSEH) AND CONTAINS INFORMATION BELONGING TO TECUMSEH. (1) IS NOT TO BE LOANED TO THE PUBLIC OR OTHERWISE DISCLOSED TO ANY SPECIFIC CONDITION THAT NEITHER IT NOR THE INFORMATION CONTAINED THEREIN SHALL BE DISCLOSED OR MADE AVAILABLE TO INDEPENDENT PARTIES WITHOUT THE SPECIFIC WRITTEN CONSENT OF TECUMSEH EXPRESSLY SUCH SPECIFICALLY APPROVED IN WRITING BY TECUMSEH AND (2) THAT IT SHALL NOT BE COPIED OR DUPLICATED IN ANY MANNER OR FORM EXPRESS WITHOUT SPECIFIC WRITTEN CONSENT AND (3) THAT ANY PRODUCTS MADE HEREUNDER OR THEREOF TO TECUMSEH AT THE SUPPLIERS RISK IF SUPPLIER MANUFACTURES

DIS.CODE 34D

NAME SALES COMPRESSOR

DWN.	CK.	APR.	SCALE
BRODERICK 4/12/90	MYOUCHET 8-15-95	BLANDEN	1"=2"

THIS PRINT SUPERSEDES ALL PRINTS PRIOR TO

TECUMSEH PRODUCTS CO.
TECUMSEH, MICHIGAN

MATERIAL

PART NO. DCAJ430

DO NOT SCALE THIS DRAWING ALL FERROUS MATERIALS MUST NOT EXHIBIT TRACE AS RECEIVED OR AT COMPRESSOR ASSEMBLY.

INTERNAL USE ONLY
UG@DISK6:[CLARK]AJ-DCAJ430□A-C.PRT